Waygate Technologies
a Baker Hughes business

Standard phased array probes and accessories

Quality at every step

For 70 years, Krautkrämer ultrasonic transducers have been synonymous with quality.

Our core ability is to match ultrasonic probes to the inspection applications of today, both simple and complex. This skill lets allows us to design and manufacture fine-tuned quality probes that meet your customer-specific requirements.

We build quality into every step we perform—from start to finish:

- **Requirement analysis.** At the very beginning of our discussions with you, we draw on our experience manufacturing more than 1 million probes—including 14,000 probe variations—to build quality into our requirement analysis process.
- **Specifications.** To help ensure quality results, each product in our one-stop-shop adheres to our exacting specifications.
- **Simulation.** Early in the process, we use industry leading simulation technology software to help us determine what needs to be done to meet application requirements. We also understand the boundaries of simulation and how that impacts the build.
- **Feasibility studies.** We support challenging applications by conducting feasibility studies in our labs, which are located worldwide. Send us your samples and we can determine the best inspection method and technology.
- **Material selection and processing.** We use the highest standards when sourcing our raw materials, and our in-house manufacturing is fully controlled to ISO standards. Our ceramics shop in Shannon, Ireland, creates piezocomposite ceramics, an in-house offering unique to our business.
- **Prototyping.** With a strong understanding of your needs, we offer prototyping to further validate that the solution works.
- **Product validation.** With an emphasis on repeatability and process stability, our exacting build-and-test procedures and specifications are followed for every single build, meaning every step includes a quality inspection/test to meet required criteria. What's documented: Each probe has a unique serial number, and every validated manufacturing step is recorded before shipment. Finally, our database stores historical test data for every probe. We provide a certification of conformance, including probe waveform and frequency spectrum results with each probe.
- **Manufacturing.** With manufacturing available in both Europe and the USA, we can provide local variation and meet local norms. In fact, we can customize your transducer to meet your specific ultrasonic testing applications. Modifications can involve transducer case design, connector options, and element size and shape, including non-standard frequencies, sensitivity, bandwidth and focusing.
- **Delivery.** Our pledge is to provide you with exceptional product availability with our global distribution sites and customer care resources, to ensure that order status is communicated until your probe reaches your door.
- **Support.** We have expert resources available to help you with your ultrasonic inspection challenges including field application engineers and remote service technicians who can be reached through phone or email 24/7. Our probes are backed by a standard one year repair or replace warranty as a testament that we stand behind our products.

Krautkrämer ultrasonic transducers from Inspection Technologies deliver consistent readings. Our quality goes beyond standard, our pricing is competitive, and our products are delivered when and where you need them.

Now that's quality, every step of the way.

Contents

5 Connector options

6 General use probes

7 Wedges/delay lines/wear caps for general use probes

8 Weld inspection probes

8 General weld inspection

9 Wedges for general weld inspection

10 Small foot print welding probes

11 Wedges for small foot print welding probes

12 Integral wedge probes

13 Corrosion probes

14 Accessories for corrosion probes

15 Composite inspection probes

15 RotoArray

16 Accessories for RotoArray

17 Water wedge probes

18 Accessories for hardwater probes

19 Immersion probes

20 Thin plate inspection probes

21 Bolt inspection probes

22 Integral wedge probes certificate

29 Solutions & services

Connector options

Almost every probe in this catalog can be delivered with four connector options.
The part numbers for each connector option are directly listed on product pages.

Phasor connector

Omniscan™ connector

Hypertronics™ connector

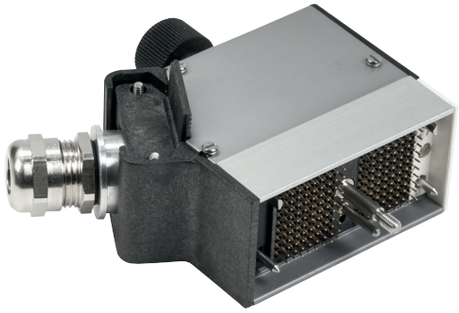

Mentor UT connector

MUX module

For maximum functionality, attach the MUX module and gain 32:128 capability, an additional hot swappable battery, and standard Tyco connector.

Probes with more than 32 elements needs the MUX module ro connect to the Mentor UT device.

General use probes

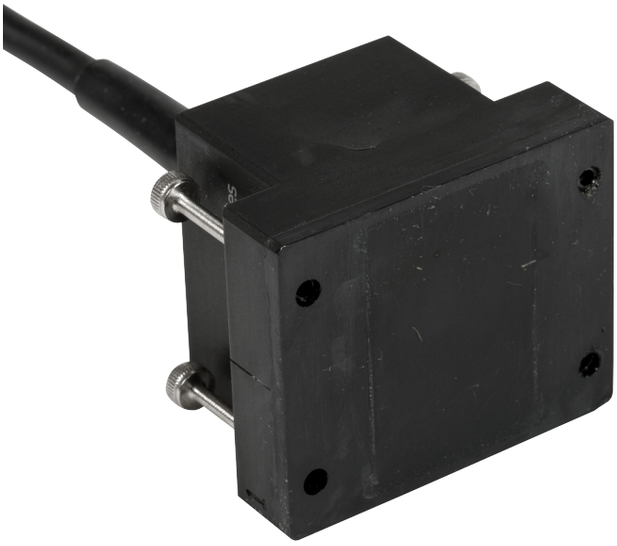

C2

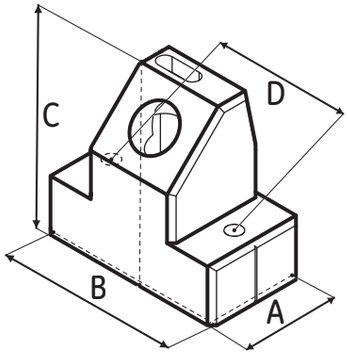

C4

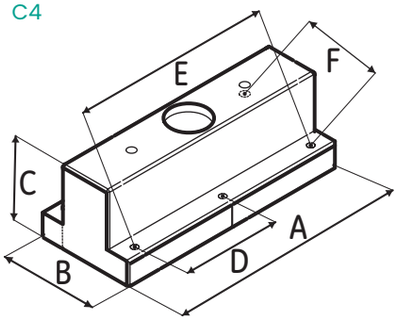

Applications

- General weld inspection
- Tubes, pipes, tanks, pressure vessels
- Axles, forgings, castings
- Bridges and other structures
- Railroad wheels and rail
- Pumps, valve housings
- Turbine blades, shafts
- Wheel rims

Features

- Wide range of applications
- 3 different connector types available
- Used with wedges, delay lines, or wear caps
- Used for sector scanning or linear scanning

Part number Phasor	Part number Hypertronics™	Part number Omniscan™	Part Number Mentor UT	Aperture (mm)	Frequency (MHz)	Element Count	Pitch (mm)	Elevation (mm)	Cable (m)	Case Style	A (mm)	B (mm)	C (mm)	D (mm)	E (mm)	F (mm)
115-100-001	115-120-001	115-130-001	115-110-001	8.0 x 9.0	2	8	1.0	9.0	3.0	C2	15.0	28.0	27.0	21.0	-	-
115-100-002	115-120-002	115-130-002	115-110-002	8.0 x 9.0	4	16	0.5	9.0	3.0	C2	15.0	28.0	27.0	21.0	-	-
115-100-003	115-120-003	115-130-003	115-110-003	16.0 x 10.0	5	16	1.0	10.0	3.0	C2	23.0	34.0	37.0	25.0	-	-
115-100-004	115-120-004	115-130-004	115-110-004	16.0 x 10.0	5	32	0.5	10.0	3.0	C2	23.0	34.0	37.0	25.0	-	-
115-100-005	115-120-005	115-130-005	115-110-005	16.0 x 13.0	2.25	16	1.0	13.0	3.0	C2	22.0	37.0	36.0	29.0	-	-
115-100-006	115-120-006	115-130-006	115-110-006	24.0 x 19.0	2.25	16	1.5	19.0	3.0	C2	30.0	45.0	30.0	37.0	-	-
115-100-007	115-120-007	115-130-007	N/A	64.0 x 10.0	5	64	1.0	10.0	3.0	C4	84.0	36.0	32.0	36.0	71.0	28.0

Wedges/delay lines/wear caps for general use probes

Features

- Sectorial scanning
- Small footprint design
- Curved wedges available
- Optional carbide and couplant ports

– Z-Offset is the dimension from the center of the array mounted on the wedge to the bottom of the wedge (perpendicular to the bottom). This value is used to calculate delay laws in the Phasor.

– WF (Wedge Front) is the dimension from the center of the array mounted on the wedge to the front of the wedge. This value is entered into the Phasor and directly affect the frame of reference from which all projection results are measured.

Standard wedge

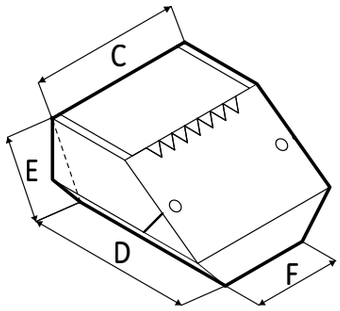

Delay line

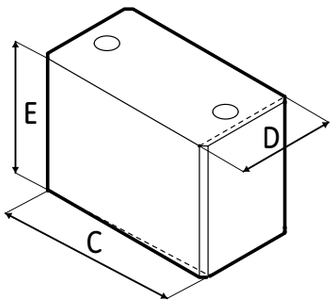

Part number Phasor	Part number Hypertronics™	Part number Omniscan™	Mentor UT Part number	Accessories part numbers: Shear wedge 35° to 75°	Delay line 20 mm (0.79”)	Delay line 40 mm (1.58”)	Wear cap
115-100-001	115-120-001	115-130-001	115-110-001	118-350-024	118-350-036	118-350-048	118-240-003
115-100-002	115-120-002	115-130-002	115-110-002	118-350-024	118-350-036	118-350-048	118-240-003
115-100-003	115-120-003	115-130-003	115-110-003	118-350-025	118-350-037	118-350-049	118-240-004
115-100-004	115-120-004	115-130-004	115-110-004	118-350-025	118-350-037	118-350-049	118-240-004
115-100-005	115-120-005	115-130-005	115-110-005	118-350-027	118-350-039	118-350-063	118-240-001
115-100-006	115-120-006	115-130-006	115-110-006	118-350-028	118-350-040	118-350-064	118-240-002
115-100-007	115-120-007	115-130-007		360-141-182 (sweep angle) 118-350-026 (fixed angle, lateral sweep)	118-350-038	118-350-050	118-240-005

Standard wedges	C (mm)	D (mm)	E (mm)	F (mm)	Incident	Z-Offset * (mm)	WF * (mm)
118-350-024	28.2	24.7	15.0	12.3	36	10.6	18.7
118-350-025	33.5	32.6	18.5	21.3	36	12.4	24.1
118-350-026	84.0	54.8	31.1	84.1	36	20.6	40.5
360-141-182	35.6	124.5	59.9	35.6	36	35.3	65.8
118-350-027	37.3	37.8	22.9	22.0	36	15.9	28.9
118-350-028	45.4	50.0	29.6	26.4	36	20.5	37.4

Standard delay lines	C (mm)	D (mm)	E (mm)
118-350-036	28.2	15.0	20.0
118-350-037	33.5	23.0	20.0
118-350-038	84.0	35.6	20.0
118-350-039	37.3	21.0	20.0
118-350-063	37.3	21.0	40.0
118-350-040	45.4	30.0	20.0
118-350-064	45.4	30.0	40.0

Standard delay lines	C (mm)	D (mm)	E (mm)
118-350-048	28.2	15.0	40.0
118-350-049	33.5	23.0	40.0
118-350-050	84.0	35.6	40.0

Weld inspection probes

General weld inspection

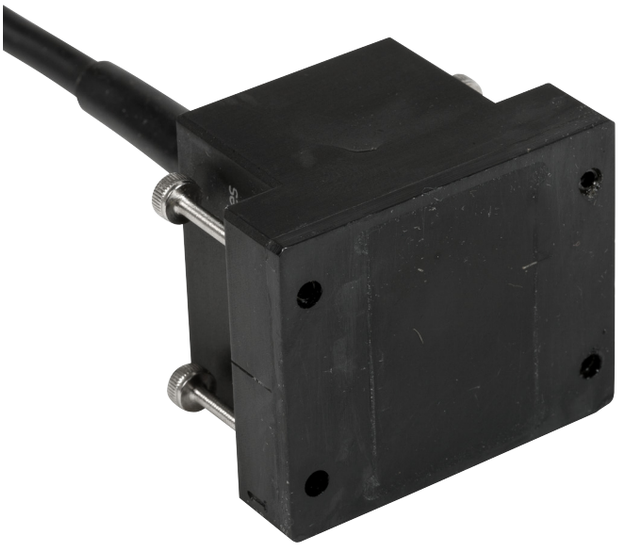

Typical weld applications:

- Plate inspection
- Pipe inspection
- Linear scanning
- Sector scanning
- Designed for wedge attachment

Features

- 3 different connector types available
- Used with wedges, delay lines, or wear caps
- Used for sector scanning or linear scanning

C2

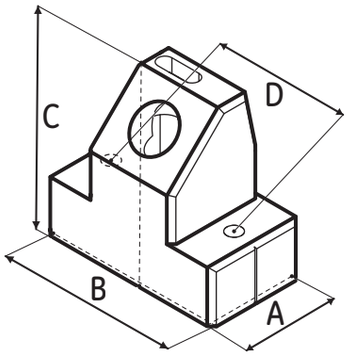

C4

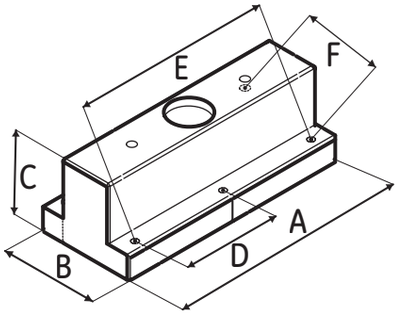

Part number Phasor	Part number Hypertronics™	Part number Omniscan™	Part Number Mentor UT	Aperture (mm)	Frequency (MHz)	Element Count	Pitch (mm)	Elevation (mm)	Cable (m)	Case Style	A (mm)	B (mm)	C (mm)	D (mm)	E (mm)	F (mm)
115-100-001	115-120-001	115-130-001	115-110-001	8.0 x 9.0	2	8	1.0	9.0	3.0	C2	15.0	28.0	27.0	21.0	-	-
115-100-002	115-120-002	115-130-002	115-110-002	8.0 x 9.0	4	16	0.5	9.0	3.0	C2	15.0	28.0	27.0	21.0	-	-
115-100-003	115-120-003	115-130-003	115-110-003	16.0 x 10.0	5	16	1.0	10.0	3.0	C2	23.0	34.0	37.0	25.0	-	-
115-100-004	115-120-004	115-130-004	115-110-004	16.0 x 10.0	5	32	0.5	10.0	3.0	C2	23.0	34.0	37.0	25.0	-	-
115-100-005	115-120-005	115-130-005	115-110-005	16.0 x 13.0	2.25	16	1.0	13.0	3.0	C2	22.0	37.0	36.0	29.0	-	-
115-100-006	115-120-006	115-130-006	115-110-006	24.0 x 19.0	2.25	16	1.5	19.0	3.0	C2	30.0	45.0	30.0	37.0	-	-
115-100-007	115-120-007	115-130-007	N/A	64.0 x 10.0	5	64	1.0	10.0	3.0	C4	84.0	36.0	32.0	36.0	71.0	28.0

Wedges for general weld inspection

Features

- Sectorial scanning
- Small footprint design
- Curved wedges available
- Optional carbide and couplant ports

* Z-Offset is the dimension from the center of the array mounted on the wedge to the bottom of the wedge (perpendicular to the bottom). This value is used to calculate delay laws in the Phasor.

* WF (Wedge Front) is the dimension from the center of the array mounted on the wedge to the front of the wedge. This value is entered into the Phasor and directly affect the frame of reference from which all projection results are measured.

Standard wedge

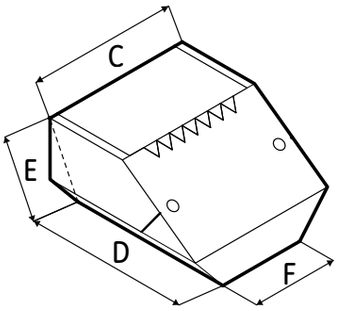

				Accessories Part numbers			
Part number Phasor	Part number Hypertronics™	Part number Omniscan™	Mentor UT Part Number	Shear Wedge 35° to 75°	Delay Line 20 mm (0.79″)	Delay Line 40 mm (1.58″)	Wear Cap
115-100-001	115-120-001	115-130-001	115-110-001	118-350-024	118-350-036	118-350-048	118-240-003
115-100-002	115-120-002	115-130-002	115-110-002	118-350-024	118-350-036	118-350-048	118-240-003
115-100-003	115-120-003	115-130-003	115-110-003	118-350-025	118-350-037	118-350-049	118-240-004
115-100-004	115-120-004	115-130-004	115-110-004	118-350-025	118-350-037	118-350-049	118-240-004
115-100-005	115-120-005	115-130-005	115-110-005	118-350-027	118-350-039	118-350-063	118-240-001
115-100-006	115-120-006	115-130-006	115-110-006	118-350-028	118-350-040	118-350-064	118-240-002
115-100-007	115-120-007	115-130-007	N/A	360-141-182 (sweep angle) 118-350-026 (fixed angle, lateral sweep)	118-350-038	118-350-050	118-240-005

Standard Wedges	C (mm)	D (mm)	E (mm)	F (mm)	Incident	Z-Offset *(mm)	WF * (mm)
118-350-024	28.2	24.7	15.0	12.3	36	10.6	18.7
118-350-025	33.5	32.6	18.5	21.3	36	12.4	24.1
118-350-026	84.0	54.8	31.1	84.1	36	20.6	40.5
360-141-182	35.6	124.5	59.9	35.6	36	35.3	65.8
118-350-027	37.3	37.8	22.9	22.0	36	15.9	28.9
118-350-028	45.4	50.0	29.6	26.4	36	20.5	37.4

Small foot print welding probes

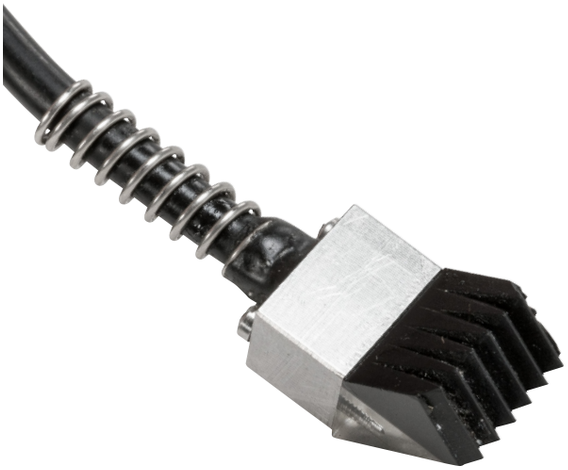

Applications

- General weld inspection, smaller objects, thinner sections
- Tubes, pipes, pressure vessels, containers
- Pumps, vlalve housings
- Turbine blades, shafts
- Wheel rims

Features

- Small contact area
- Fits on standard single element MSWS wedges
- Comparable to standard single element MSWS probes with Phased Array capabilities
- Available with 3 different connectors

MSWS 1

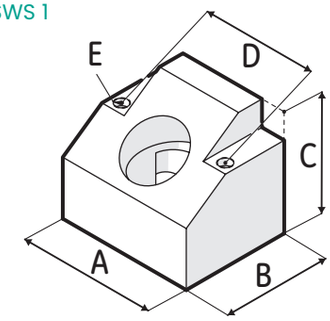

MSWS 2

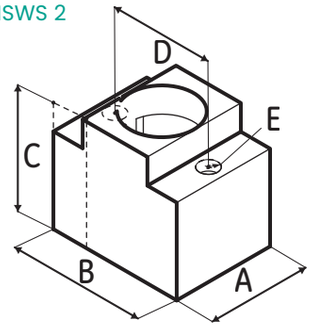

Part number Phasor	Part number Hypertronics™	Part number Omniscan™	Aperture (mm)	Frequency (MHz)	Element Count	Pitch (mm)	Elevation (mm)	Cable (m)	Case Style	A (mm)	B (mm)	C (mm)	D (mm)	E
115-100-010	115-120-010	115-130-010	12.8 x 12.7	5	32	0.4	12.7	3	MSWS1	19.1	15.1	16.3	16.0	#1-64
115-100-011	115-120-011	115-130-011	12.8 x 12.7	10	32	0.4	12.7	3	MSWS1	19.1	15.1	16.3	16.0	#1-64
115-100-015	115-120-015	115-130-015	6.35 x 6.35	10	16	0.4	6.35	3	MSWS2	9.5	12.6	11.2	9.5	#1-64
115-100-012	115-120-012	115-130-012	12.8 x 12.7	5	16	0.8	12.7	3	MSWS1	19.1	15.1	16.3	16.0	#1-64
115-100-013	115-120-013	115-130-013	12.8 x 12.7	2.25	16	0.8	12.7	3	MSWS1	19.1	15.1	16.3	16.0	#1-64
115-100-037	115-120-037	115-130-037	6.4 x 6.4	5	16	0.4	6.4	3	MSWS2	9.5	12.6	11.2	9.5	#1-64

Wedges for small foot print welding probes

Features

- Delay line or wedge attachment
- Small contact area
- Custom wedge angles and curvatures can be special ordered
- Manual or automated inspections

W1

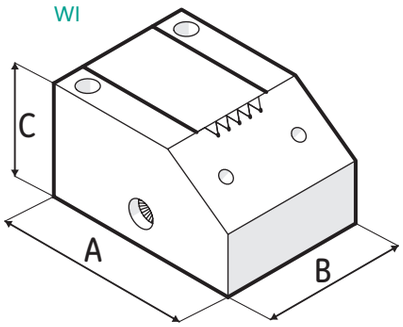

W2

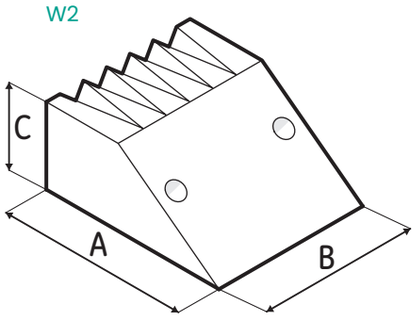

W3

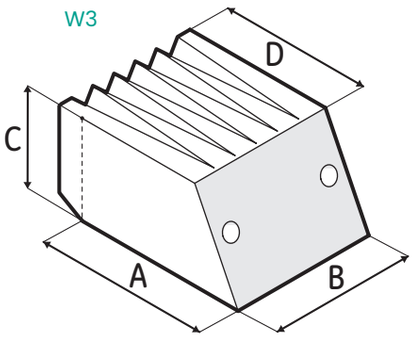

Mates to case style	Wedge style	Order code	Shear wave carbon steel	A (mm)	B (mm)	C (mm)	D (mm)
MSWS2	W1	360-141-219	30-80 DG	22.9	16.8	12.9	-
MSWS2	W2	118-340-028	45 DG	15.2	12.7	6.7	-
MSWS2	W2	118-340-030	60 DG	16.6	12.7	7.6	-
MSWS2	W2	118-340-032	70 DG	18.5	12.7	8.2	-
MSWS2	W2	118-340-034	80 DG	20.2	12.7	8.5	-
MSWS2	W3	118-340-036	90 DG	15.2	12.7	8.6	17.4
MSWS1	W2	118-340-040	45 DG	23.9	19.1	10.9	-
MSWS1	W2	118-340-042	60 DG	26.7	19.1	12.6	-
MSWS1	W2	118-340-044	70 DG	29.8	19.1	13.5	-
MSWS1	W2	118-340-046	80 DG	32.4	19.1	14.0	-
MSWS1	W3	118-340-048	90 DG	26.3	19.1	14.8	30.2

Integral wedge probes

Applications

- General weld inspection: MWB for small parts, SWB for thick parts
- Other applications where conventional MWB or SWB probes are in use

Features

- Easy transfer from conventional to phased array inspection
- Durable and ergonomically-designed, die-cast housing as known from conventional probes
- Existing mechanics and probe holders can be re-used
- Non-detachable wedges, no coupling loss between probe and wedge
- Replacement soles (sold separately) for extended service life

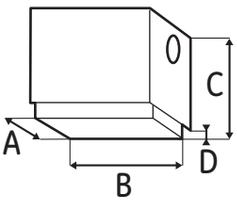

Part number Phasor	Part number Hypertronics™	Part number Omniscan™	Probe Description	Aperture (mm)	Frequency (MHz)	Element Count	Pitch (mm)	Elevation (mm)	Cable (m)	Case Style	A (mm)	B (mm)	C (mm)	D (mm)
69141	69732	69730	MWB2PA16	8.0 x 9.0	2	16	0.5	9.0	2.0	MWB	14.0	24.0	22.0	2.0
69142	69733	69731	MWB4PA16	8.0 x 9.0	4	16	0.5	9.0	2.0	MWB	14.0	24.0	22.0	2.0

Part number Phasor	Part number Hypertronics™	Part number Omniscan™	Probe Description	Aperture (mm)	Frequency (MHz)	Element Count	Pitch (mm)	Elevation (mm)	Cable (m)	Case Style	A (mm)	B (mm)	C (mm)	D (mm)
69143	69738	69736	SWB2PA16	14.0 x 14.0	2	16	0.9	14.0	2.0	SWB	22.0	37.0	31.0	3.0
69144	69739	69737	SWB4PA16	14.0 x 14.0	4	16	0.9	14.0	2.0	SWB	22.0	37.0	31.0	3.0

Corrosion probes

Applications

- Remaining wall thickness, corrosion, erosion
- Near surface flaw detection
- Bond testing

Features

- Amazing near surface resolution;
  1.9 mm (0.075")
  on a #4 flat bottomed hole
  (1.5 mm / 0.062" diameter)
- Optimum test range 1.9 mm (0.075")
  to 25.4 mm (1") in steel
- Adjustable wear bars
- Available with 3 different connectors

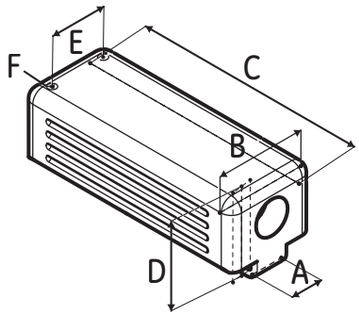

Part number Phasor	Part number Hypertronics™	Part number Omniscan™	Part number Mentor UT	Aperture (mm)	Frequency (MHz)	Element Count	Pitch (mm)	Elevation (mm)	Cable (m)	A (mm)	B (mm)	C (mm)	D (mm)	E (mm)	F
115-100-020	115-120-020	115-130-020	115-110-020	48.0 x 10.0	5	Dual 32	1.5	5.0	3.0	9.1	25.4	65.5	24.4	16.0	M3X0.5
115-100-021	115-120-021	115-130-021	115-110-021	24.0 x 10.0	5	Dual 32	0.8	5.0	3.0	9.1	25.4	41.0	24.4	16.0	M3X0.5

Accessories for corrosion probes

Features

- Curved wear bars for alignment on curved pipe
- Flat wear bars for durability on flat plate
- Potted wear bars for flat or curved bars with fittings for couplant feed

Curved wear bars

Curved wear bars

Long flat wear bars

Flat ported wear bars

Curved ported wear bars

Flat Wear Bars	Mate
389-075-530	115-100-020, 115-120-020, 115-130-020
389-075-540	115-100-021, 115-120-021, 115-130-021

Curved Wear Bars	Mate
389-075-560	115-100-020, 115-120-020, 115-130-020
389-075-570	115-100-021, 115-120-021, 115-130-021

Curved Ported Wear Bars	Mate
389-077-160	115-100-020, 115-120-020, 115-130-020
389-077-150	115-100-021, 115-120-021, 115-130-021

Flat Ported Wear Bars	Mate
389-076-700	115-100-020, 115-120-020, 115-130-020
389-077-140	115-100-021, 115-120-021, 115-130-021

Composite inspection probes

RotoArray

Applications

- Primarily for the inspection of composite materials
  and structures
- Flaw detection and thickness measurement in a wide range of materials
- Inspection during manufacture as well as for in service inspection

Features

- Excellent acoustic performance
- Use in any attitude including overhead
- Transparent tire for easy bubble removal
- Unique encoder
- 3 popular connector options
- Owner serviceable
- Platform for future models
- Interactive digital manual on UTprobes.com

Standard 0-59 mm width array

The compact 51.2 mm RotoArray is designed for quick and easy scanning of a variety of different applications. Its small design allows it to be used in tight locations and its light weight and egronomic design keeps the operator from becoming fatigued during long periods of use.

Part number Phasor	Part number Hypertronics™	Part number Omniscan™	Coverage area (mm)	Frequency (MHz)	Pitch (mm)	Elements	Elevation (mm)	Focus	Cable (m)	Probe Offset (mm)
115-910-100	115-920-100	115-930-100	51.2	5	0.8	64	6.4	Flat	3.0	28.2
115-910-700	115-920-700	115-930-700	51.2	2.25	0.8	64	6.4	Flat	3.0	28.2

Standard 60-99 mm width array

The 81.3 mm RotoArray is currently our only standard offering in the 60-99 mm range. Its larger size makes it ideal for inspecting airframes and fuselages.

Part number Phasor	Part number Hypertronics™	Part number Omniscan™	Coverage area (mm)	Frequency (MHz)	Pitch (mm)	Elements	Elevation (mm)	Focus	Cable (m)	Probe Offset (mm)
115-910-200	115-920-200	115-930-200	81.3	5	1.3	64	8.0	Flat	3.0	28.2
115-910-750	115-920-750	115-930-750	81.3	2.25	1.3	64	8.0	Flat	3.0	28.2

Accessories for RotoArray

Included Accessories

- The accessories included with the RotoArray allow for full functionality, and help to keep it maintained and functioning.

Optional Accessories

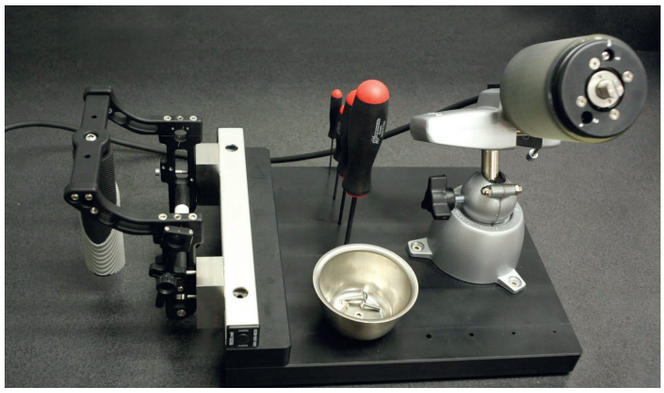

- The optional accessories are highly recommended for the RotoArray and provide an ease of maintenance, verification, and use.
- The comprehensive RotoArray Service Station is one of the most useful accessories allowing users to minimize downtime by carrying out any necessary repairs and maintenance on a customized workbench fitted with all the necessary tools.

	Included / Optional Accessories	Part Numbers	115-910-100	115-920-100	115-930-100	115-910-200	115-920-200	115-930-200
Encoder 3 meter cable to 7 pin Lemo	Included (if Yes)	388-000-506	YES	YES	YES	YES	YES	YES
Frame Assembly w/ handels	Included (if Yes)		YES	YES	YES	YES	YES	YES
3 switch assembly w/ 3meter lemo	Included (if Yes)	388-000-500	NO	YES	YES	NO	YES	YES
Fluid fill bottle assembly	Included (if Yes)	389-079-240	YES	YES	YES	YES	YES	YES
Couplant spray bottle	Included (if Yes)	021-265-015	YES	YES	YES	YES	YES	YES
Propylene Glycol 1Qt	Included (if Yes)	111-200-559	YES	YES	YES	YES	YES	YES
RotoArray tool kit	Included (if Yes)	388-000-502	YES	YES	YES	YES	YES	YES
RotoArray spare parts kit	Included (if Yes)	388-000-503	YES	YES	YES	YES	YES	YES
Case	Included (optional large or small)	Small= 021-026-099 Large= 021-026-354	Small or large	Small or large	Small or large	Small or large	Small or large	Small or large
Adapter cable	Included (if Yes) (optional DBHD or Fisher)	DBHD= 388-000-501 Fisher= 388-000-525	NO	DBHD-15 or Fisher	DBHD-15 or Fisher	NO	DBHD-15 or Fisher	DBHD-15 or Fisher
Tire change station	Optional	389-079-390	Optional	Optional	Optional	Optional	Optional	Optional
Egronomic water sprayer	Optional	021-265-020	Optional	Optional	Optional	Optional	Optional	Optional
Demo block kit	Optional	389-081-400	Optional	Optional	Optional	Optional	Optional	Optional

Water wedge probes

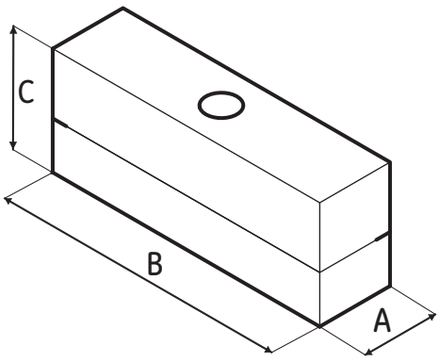

Applications

- Composite inspection
- Bubbler applications where water is an issue

Features

- Probes use hardwater delay* to minimize water required for coupling
- Delay acoustically matched to water to minimize the water to delay interface
- Available with 3 different connectors

*Hardwater delay is a material applied to the face of the probe that is non-removable.

Main benefits:

- Accoustically matches water to minimize interface echo.
- Improves near surface resolution.
- Decreases operating gain and frequency. (5MHz design frequency operates at approximately 2.6MHz)

Part number Phasor	Part number Hypertronics™	Part number Omniscan™	Aperture (mm)	Frequency (MHz)	Element Count	Pitch (mm)	Elevation (mm)	Cable (mm)	A (mm)	B (mm)	C (mm)
115-100-027	115-120-027	115-130-027	40.6 x 8.0	5	32	1.3	8.0	6.0	13.0	43.0	31.0
115-100-028	115-120-028	115-130-028	81.2 x 8.0	5	64	1.3	8.0	6.0	13.0	86.0	31.0

Accessories for hardwater probes

Features

- Bubbler fixture for automated or hand scanning
- Available with or without encoder
- Applies 0.050” water coupling to hardwater probe

WB1

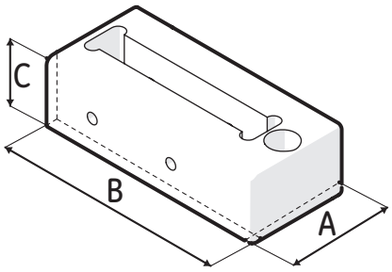

WB2

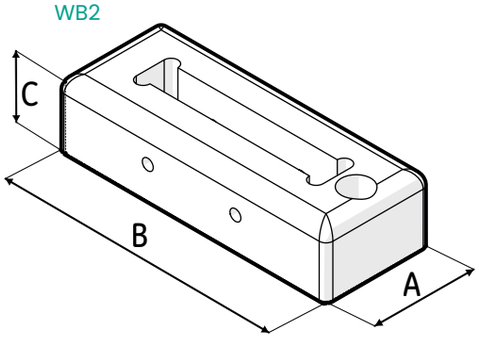

Part Number	Waterbox	Description	Mating Probe	A (mm)	B (mm)	C (mm)
022-509-571	WB1	Waterbox with side mount encoder module	Hardwater Probe, 115-100-028, 115-120-028, 115-130-028	48.0	106.0	31.0
389-064-070	WB2	Waterbox, no encoder		48.0	125.0	31.0
389-074-200	WB2	Waterbox with mini encoder				

Immersion probes

Applications

- Composite plate inspection
- Immersion scanning area coverage
- Plates, billets and bars
- Disks, axles and shafts
- Large area scanning

Features

- Acoustically matched for best efficiency in water
- Fixture mountable
- Fast inspection of large areas
- Waterproof design
- Near wall design allows close access to edge of case (~1 mm)
- 6 meter cable

IM2 & IM3

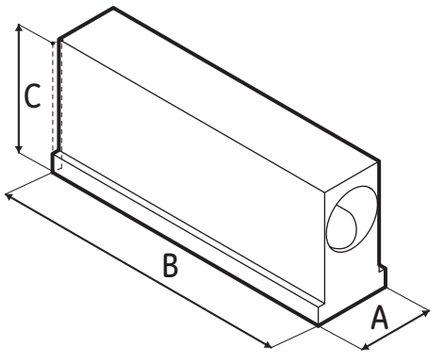

INW2

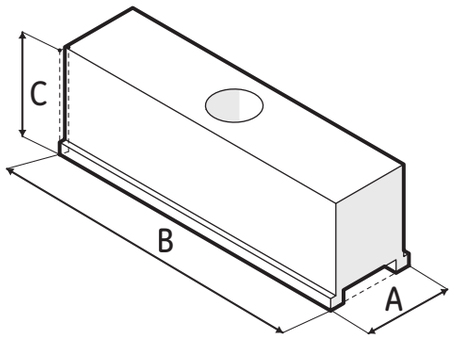

Part number Phasor	Part number Hypertronics™	Part number Omniscan™	Aperture (mm)	Frequency (MHz)	Element Count	Pitch (mm)	Elevation (mm)	Cable (m)	Case style	A (mm)	B (mm)	C (mm)
115-100-035	115-120-035	115-130-035	64.0 x 7.0	3.5	64	1.0	7.0	6.0	INW2	19.0	65.9	22.0
115-100-036	115-120-036	115-130-036	64.0 x 7.0	5	64	1.0	7.0	6.0	INW2	19.0	65.9	22.0
N/A	115-120-031	115-130-031	76.8 x 10.0	5	128	0.6	10.0	6.0	IM2	21.0	83.0	35.0
N/A	115-120-032	115-130-032	64.0 x 7.0	10	128	0.5	7.0	6.0	IM2	21.0	83.0	35.0
N/A	115-120-033	115-130-033	96.0 x 12.0	2.25	128	0.8	12.0	6.0	IM3	21.0	102.0	35.0
N/A	115-120-034	115-130-034	96.0 x 10.0	5	128	0.8	10.0	6.0	IM3	21.0	102.0	35.0

Thin plate inspection probes

Typical Applications

• Thin Plate, near surface defects, small defects

Advantages

- High frequency highly damped arrays for near surface inspections
- Acoustically matched to water/delay material
- Waterproof design

Delay Line

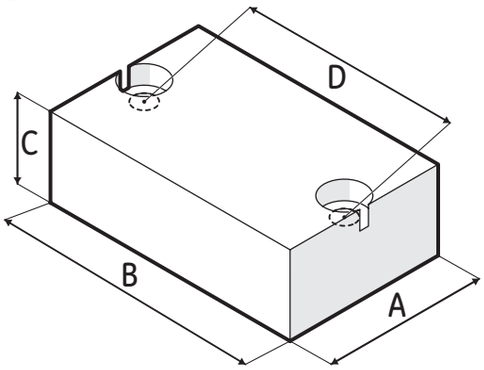

Part number Phasor	Part number Hypertronics™	Part number Omniscan™	Aperture (mm)	Frequency (MHz)	Element Count	Pitch (mm)	Elevation (mm)	Cable (m)	Case Style	A (mm)	B (mm)	C (mm)	D (mm)	E
115-100-025	115-120-025	115-130-025	16.0 x 10.0	10	32	0.5	10.0	3.0	HRD1	23.8	38.5	25.4	32.2	M3X0.5
115-100-026	115-120-026	115-130-026	32.0 x 10.0	10	64	0.5	10.0	3.0	HRD1	23.8	54.5	25.4	48.2	M3X0.5

Removable Delay Line (included with transducer)	A (mm)	B (mm)	C (mm)	D (mm)	Transducer number
387-007-296 (12.7 mm length)	23.8	38.5	12.7	32.2	115-100-025, 115-120-025, 115-130-025
387-007-295 (12.7 mm length)	23.8	54.5	12.7	48.2	115-100-026, 115-120-026, 115-130-026

Bolt inspection probes

- Straight beam contact phased array probes
- For the detection of defective areas in threaded bolts
- High quality inspection and probability of detection
- Reduce construction failures and potential liability
- Protective membrane for steady coupling on rough surfaces
- Available with different connectors

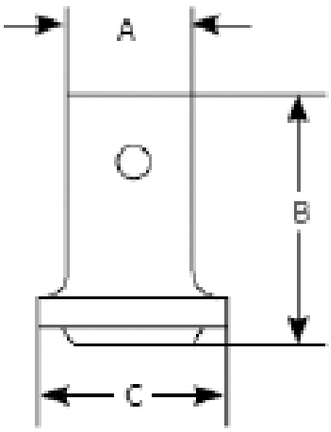

Part Number Phasor	Part Number Mentor	Part Number Hypertronics	Part Number Omnicscan	Probe Description	Frequency (MHz)	Element Count	Pitch (mm)	Elevation (mm)	Cable (m)	Case Style	A (mm)	B (mm)	C (mm)
0069805	0600416	0069894	0069888	B2S PA16	2	16	1.5	24	3	B S	30	59	45
0069806	0600417	0069895	0069889	B4S PA16	4	16	1.5	24	3	B S	30	59	45
0069905	0600418	0069909	0069907	MB2S PA16	2	16	0.63	10	3	MB S	20	43	25
0069906	0600419	0069910	0069908	MB4S PA16	4	16	0.63	10	3	MB S	20	43	25

Solutions & services

Application centers

Help and available all around the world

We have 11 application centers strategically sited around the world which provide our customers with personalized problem solving and custom transducer designs for the toughest applications. We offer advice and assistance to many different industry segments.

- Highly skilled, experienced an dedicated team
- Covering a wide range pf NDT disciplines
- Solving inspection application problems quickly
- Providing industry-specific expertise for unique problems
- Designing and manufacturing custom-made transducers for most applications

Product services

Maximizing uptime and maintaining optimum performance

We provide our customers with a rule range of product support which covers practically any eventuality from simple repair to training and software updates. A world-class standard of service and our financial stability means that you can count on us to e there when needed.

- Field service, repair and calibration
- Parts fulfilment services
- Training programs
- Technical phone support
- Remove monitoring and diagnostics
- Software and hardware upgrades
- Rental, lease and finance solutions

Regional offices

Europe

Germany
Robert Bosch Strasse 3
50354 Huerth
+49 2233 6010

United Kingdom
892 Charter Avenue Canley
Coventry CV4 8AF
+44 845 130 3925

France
68, Chemin des Ormeaux
Limonest 69760
+33 47 217 9220

Spain
San Maximo, 31, Planta 4A, Nave 6
Madrid 28041
+34 915 500 59 90

America

United States
721 Visions Drive
Skaneateles, NY 13152
+1 888 332 3848 (toll free)
+1 315 554 2000 ext. 1

Brazil
Av. das Nacoes Unidas, 8501 1st floor
São Paulo, SP 05425-070
+55 3067 8166

Asia

China
5F, Building 1, No.1 Huatuo Road,
Zhangjiang High-Tech Park,
Shanghai 201203
+86 800 915 9966 (toll-free)
+86 (0) 21-3877 7888

Unit 1602, 16/F Sing Pao Building
101 King's Road
North Point
Hong Kong
+852 2877 0801

Japan
7F Medie Corp Bldg. 8
2-4-14 Kichijoji Honcho, Musashino-shi
Tokyo 180-0004
+81 442 67 7067

Baker Hughes sensing and inspection technologies has sales and service offices all over the world. Below are some of our locations.
Visit www.industrial.ai for a complete listing.

- Berchem, Belgium
- Alzenau, Germany
- Burford, United Kingdom
- Moscow, Russia
- Bucharest, Romania
- Prague, Czech Republic
- Stockholm, Sweden
- Milan, Italy
- East Perth, Australia
- Singapore
- Dubai, UAE
- Buenos Aires, Argentina
- Mexico City, Mexico
- Airdrie, Alberta, Canada
- Toronto, Ontario, Canda
- Montreal, Quebec, Canada

Baker Hughes ™

Copyright 2020 Baker Hughes Company. All rights reserved.

BHCS34593 01/2020

bakerhughesds.com